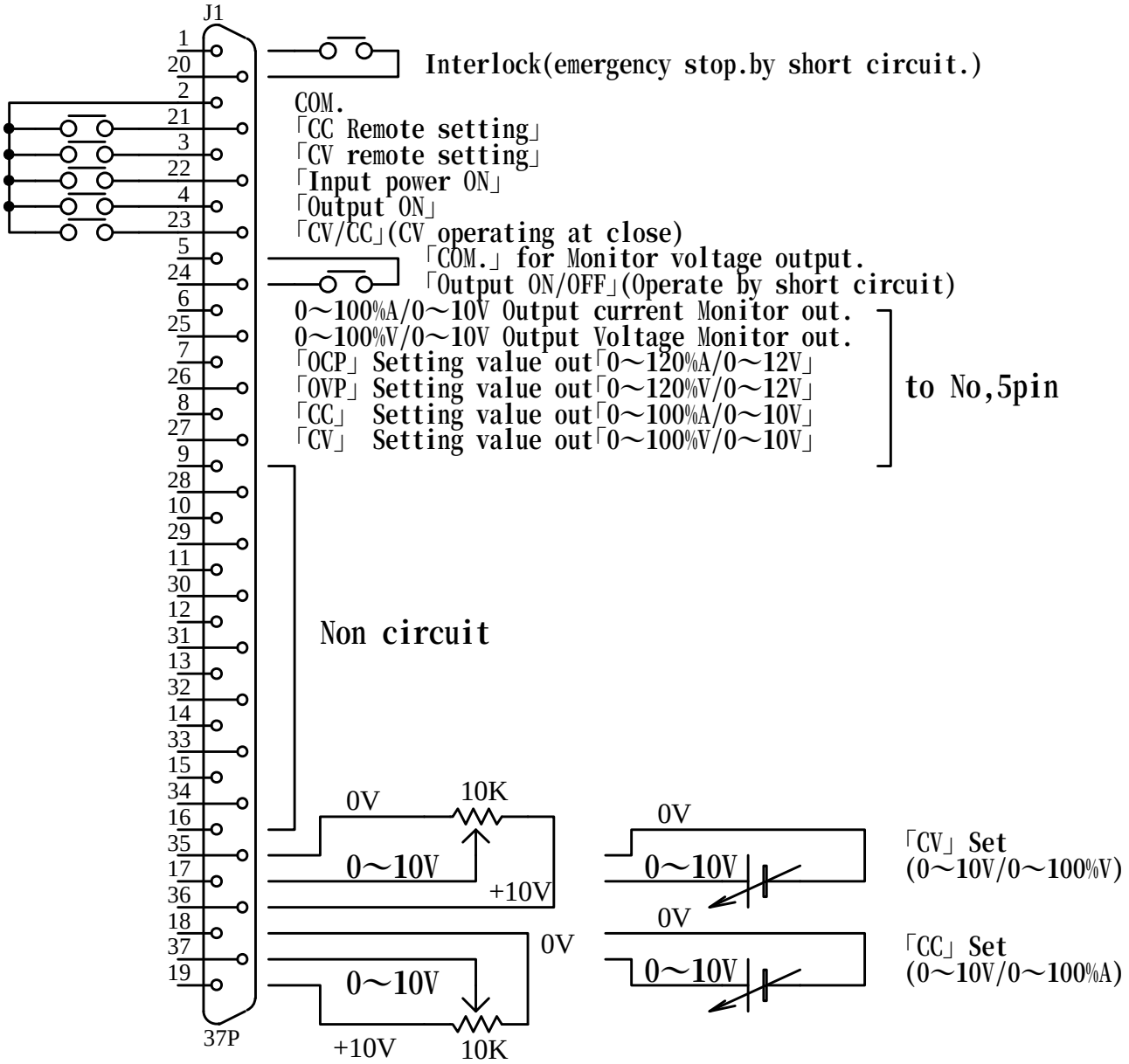REMOTE OPERATING TERMINALS (J1)